Design for Code Acceptance

6

# Prescriptive Residential Wood Deck Construction Guide

**Based on the *2012 International Residential Code***

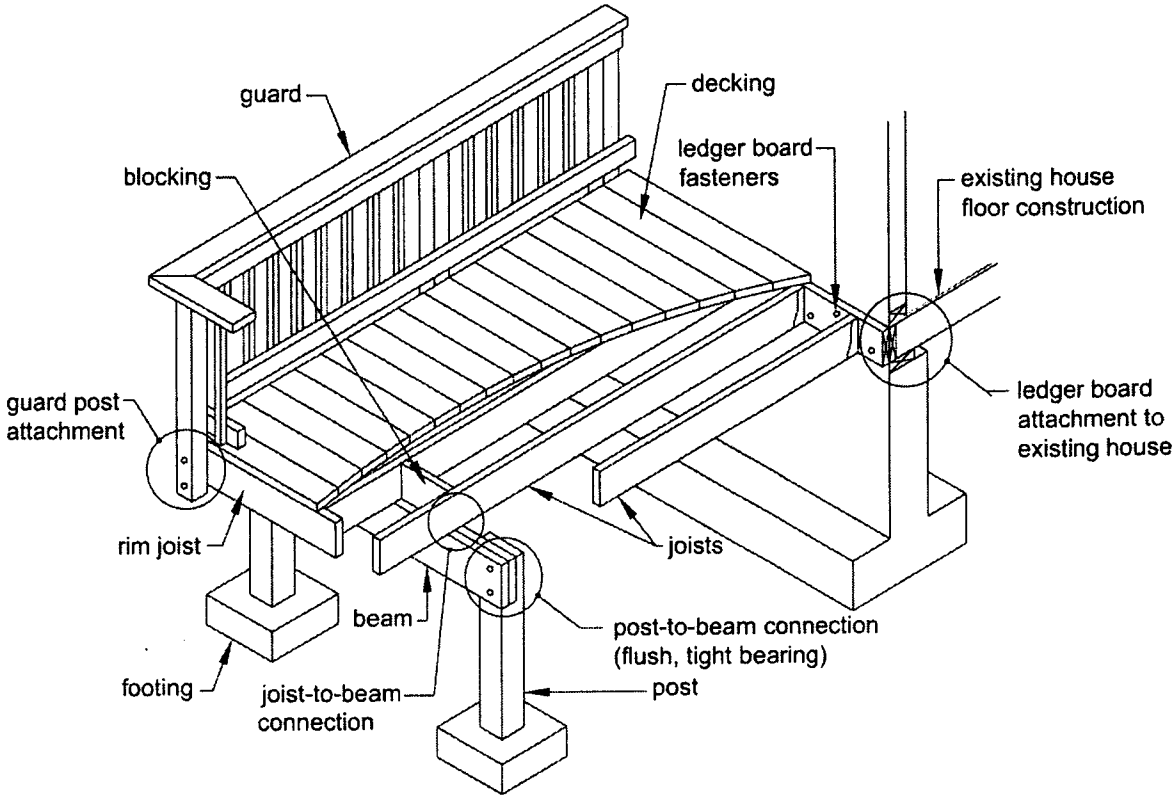


Where applicable, provisions and details contained in this document are based on the *International Residential Code (IRC)* [bracketed text references applicable sections of the *IRC*]. Prescriptive construction methods recommended meet or exceed minimum requirements of the *IRC*. Provisions that are not found in the *IRC* are recommended as good industry practice. Where differences exist between provisions of this document and the *IRC*, provisions of the *IRC* shall apply. This document is not intended to preclude the use of other construction methods or materials. All construction and materials must be *approved* by the authority having jurisdiction. Every effort has been made to reflect the language and intent of the *IRC*. However, no assurance can be given that designs and construction made in accordance with this document meet the requirements of any particular jurisdiction.

**Copyright © 2014 American Wood Council**

**CONTENTS**

MINIMUM REQUIREMENTS & LIMITATIONS ..... 2
DECKING REQUIREMENTS ..... 3
JOIST SIZE ..... 3
BEAM SIZE & ASSEMBLY REQUIREMENTS ..... 5
DECK FRAMING PLAN ..... 8
JOIST-TO-BEAM CONNECTION ..... 9
JOIST HANGERS ..... 9
POST REQUIREMENTS ..... 10
RIM JOIST REQUIREMENTS ..... 11
FOOTINGS ..... 11
LEDGER ATTACHMENT REQUIREMENTS ..... 13
PROHIBITED LEDGER ATTACHMENTS ..... 15
LEDGER BOARD FASTENERS ..... 15
NON-LEDGER DECKS - VERTICAL LOADS ..... 17
DECK LATERAL LOADS ..... 17
GUARD REQUIREMENTS ..... 19
GUARD POST ATTACHMENTS ..... 19
STAIR REQUIREMENTS ..... 20
STAIR HANDRAIL REQUIREMENTS ..... 22
STAIR FOOTING REQUIREMENTS ..... 22
STAIR LIGHTING REQUIREMENTS ..... 22
FRAMING AT CHIMNEY OR BAY WINDOW ..... 23

## MINIMUM REQUIREMENTS & LIMITATIONS

1. This document applies to single level residential wood decks that are attached to the house to resist lateral forces. [R507.2.3]
2. Overall deck length shall be equal to or less than overall deck width. See DECK FRAMING PLAN for definition of deck length and width.
3. Minimum post size is 6x6 nominal and maximum post height shall be in accordance with Table 4.
4. All lumber shall be identified by the grade mark of, or certificate of inspection issued by, an *approved* lumber grading or inspection bureau or agency (www.alsc.org). All lumber and glued laminated timber shall be a naturally durable species (such as Redwood or Western Cedars with 90 percent or more of the width of each side is heartwood); or be pressure preservatively treated with an *approved* process in accordance with American Wood Protection Association standards (Table 1) [R317 and R318]. All lumber in contact with the ground shall be *approved* preservative treated wood suitable for ground contact. [R317.1.2] All cuts shall be field treated with an *approved* preservative (such as copper naphthenate) [R402.1.2].
5. All nails shall meet the requirements of *ASTM F 1667*. Threaded nails as stated in this document include helical (spiral) and annular (ring-shank) nails. Wood screws shall meet the requirements of *ANSI/ASME B18.6.1*. Bolts and lag screws shall meet the requirements of *ANSI/ASME B18.2.1*.
6. Throughout this document, ½" diameter bolts and lag screws are specified for various connections. Edge distance and spacing requirements are based on ½" diameter fasteners. If larger (or smaller) fasteners are specified, edge distance and spacing shall be adjusted.
7. To resist corrosion, the following is required [R317.3]:
   - All screws, bolts, washers, nuts, and nails for use with preservative treated wood shall be hot-dipped zinc-coated galvanized steel, stainless steel, silicon bronze, or copper. Hot-dipped galvanized fasteners shall meet the requirements of *ASTM A 153, Standard Specification for Zinc Coating (Hot-Dip) on Iron and Steel Hardware,* Class D for fasteners $^3/_8$" diameter and smaller or Class C for fasteners with diameters over $^3/_8$".
   - Fasteners other than nails and timber rivets shall be permitted to be of mechanically deposited zinc-coated steel with coating weights in accordance with *ASTM B 695*, Class 55, minimum.
   - All connectors (joist hangers, cast-in-place post anchors, etc.) shall be galvanized or shall be stainless steel. Hardware to be hot-dipped prior to fabrication shall meet *ASTM A 653, Standard Specification for Steel Sheet, Zinc-Coated (Galvanized) or Zinc-Iron Alloy-Coated (Galvannealed) by the Hot-Dip Process*, G-185 coating. Hardware to be hot-dipped galvanized after fabrication shall meet *ASTM A 123, Specification for Zinc (Hot-Dip Galvanized) Coatings on Iron and Steel Products.*
   - Fasteners and connectors exposed to salt water or located within 300 feet of a salt water shoreline shall be stainless steel grade 304 or 316.
   - Fasteners and connectors shall be of the same corrosion-resistant material.
   - Other coated or non-ferrous fasteners or hardware shall be as *approved* by the authority having jurisdiction.
8. Decks supporting large concentrated loads such as hot tubs are beyond the scope of this document.
9. This document does not apply to decks which will experience snow loads, snow drift loads, or sliding snow loads that exceed 40 psf.
10. Lateral load resistance is limited to the prescriptive provisions of R507.2.3 of the IRC. Alternative loads and detailing shall be approved by the authority having jurisdiction.

11. Flashing shall be corrosion-resistant metal [R703.8] of minimum nominal 0.019-inch thickness or *approved* non-metallic material. Aluminum should not be used in direct contact with lumber treated with preservatives that contain copper such as ACQ, Copper Azole, or ACZA.
12. Decks shall not be used or occupied until final inspection and approval is obtained.
13. This document is not intended to preclude the use of other construction methods or materials not described herein.

**Table 1. Common Species and Use Categories for Decay Resistance.[1]**

| | Species | Above Ground | Ground Contact |
|---|---|---|---|
| Preservative-Treated[2] | Southern Pine | X | X |
| | Douglas Fir-Larch | X | X |
| | Hem-Fir | X | X |
| | SPF | X | |
| | Ponderosa Pine | X | X |
| | Red Pine | X | X |
| | Redwood | X | X |
| | Western Cedars | X | |
| Naturally Durable[3] | Redwood | X | |
| | Western Cedars | X | |

1. Use categories listed in Table 1 are based on the American Wood Protection Association (AWPA) *Book of Standards*.
2. Above Ground – UC3B; Ground Contact – UC4A.
3. Naturally durable species with 90% heartwood in width on each side need not be treated per minimum requirements.

## DECKING REQUIREMENTS

All decking material shall be composed of dimension lumber (2" nominal thickness) or span rated decking in accordance with the American Lumber Standard Committee *Policy for Evaluation of Recommended Spans for Span Rated Decking Products (November 5, 2004)*. Attach decking to each joist with 2-8d threaded nails or 2-#8 screws. Space decking boards approximately $^1/_8$" apart. See Figure 11 for decking connection requirements at the rim joist. Decking placement may range from an angle perpendicular to the joists to an angle of 45 degrees to the joists. Each segment of decking must bear on a minimum of 3 joists (or 3 supports).

Decking not meeting these requirements may be substituted when the product has been *approved* by the authority having jurisdiction; however, connections equivalent to those shown for lumber or span rated decking are assumed.

## JOIST SIZE

The span of a joist, L, is measured from the face of support at one end of the joist to the face of support at the other end of the joist and does not include the length of the overhangs, $L_O$. Use Table 2 to determine allowable joist span, $L_J$, based on lumber size and joist spacing. Joist span, L, must be less than or equal to allowable joist span, $L_J$. Overhang length is the lesser of allowable overhang, $L_O$, or one fourth the joist span, L/4. See Figure 1 and Figure 2 for joist span types.

**Table 2. Maximum Joist Spans and Overhangs.[1]**

| Species | Size | Joist Spacing (o.c.) 12" | 16" | 24" | 12" | 16" | 24" |
|---|---|---|---|---|---|---|---|
| | | Allowable Span[2] ($L_J$) | | | Allowable Overhang[3] ($L_O$) | | |
| Southern Pine | 2x6[6] | 9' - 11" | 9' - 0" | 7' - 7" | 1' - 0" | 1' - 1" | 1' - 3" |
| | 2x8 | 13' - 1" | 11' - 10" | 9' - 8" | 1' - 10" | 2' - 0" | 2' - 4" |
| | 2x10 | 16' - 2" | 14' - 0" | 11' - 5" | 3' - 1" | 3' - 5" | 2' - 10" |
| | 2x12 | 18' - 0"[7] | 16' - 6" | 13' - 6" | 4' - 6" | 4' - 2" | 3' - 4" |
| Douglas Fir-Larch, Hem-Fir, Spruce-Pine-Fir[4] | 2x6[6] | 9' - 6" | 8' - 4" | 6' - 10" | 0' - 11" | 1' - 0" | 1' - 2" |
| | 2x8 | 12' - 6" | 11' - 1" | 9' - 1" | 1' - 8" | 1' - 10" | 2' - 2" |
| | 2x10 | 15' - 8" | 13' - 7" | 11' - 1" | 2' - 10" | 3' - 2" | 2' - 9" |
| | 2x12 | 18' - 0"[7] | 15' - 9" | 12' - 10" | 4' - 4" | 3' - 11" | 3' - 3" |
| Redwood, Western Cedars, Ponderosa Pine[5], Red Pine[5] | 2x6[6] | 8' - 10" | 8' - 0" | 6' - 10" | 0' - 9" | 0' - 10" | 0' - 11" |
| | 2x8 | 11' - 8" | 10' - 7" | 8' - 8" | 1' - 5" | 1' - 7" | 1' - 9" |
| | 2x10 | 14' - 11" | 13' - 0" | 10' - 7" | 2' - 5" | 2' - 7" | 2' - 8" |
| | 2x12 | 17' - 5" | 15' - 1" | 12' - 4" | 3' - 7" | 3' - 9" | 3' - 1" |

1. Assumes 40 psf live load, 10 psf dead load, No. 2 stress grade, and wet service conditions.
2. Assumes L/360 deflection.
3. Maximum allowable overhang cannot exceed L/4 or ¼ of actual main span. Assumes, cantilever length/180 deflection with 220 lb point load (See Figure 1A and Figure 2).
4. Incising assumed for Douglas fir-larch, hem-fir, and spruce-pine-fir.
5. Design values based on northern species with no incising assumed.
6. Ledger shall be a minimum of 2x8 nominal. Where guards are required, outside joists and rim joists shall be a minimum of 2x8 nominal.
7. Joist length prescriptively limited to 18'-0" for footing design.

**Figure 1A. Joist Span – Joists Attached at House and Bearing Over Beam.**

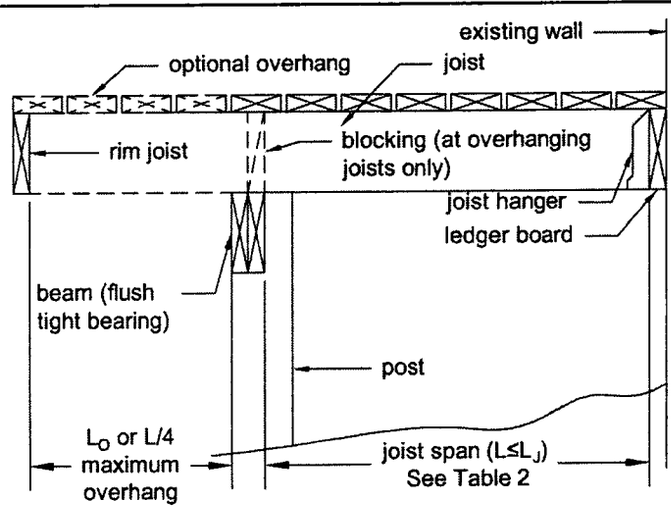

**Figure 1B. Joist Span – Joists Attached at House and to Side of Beam.**

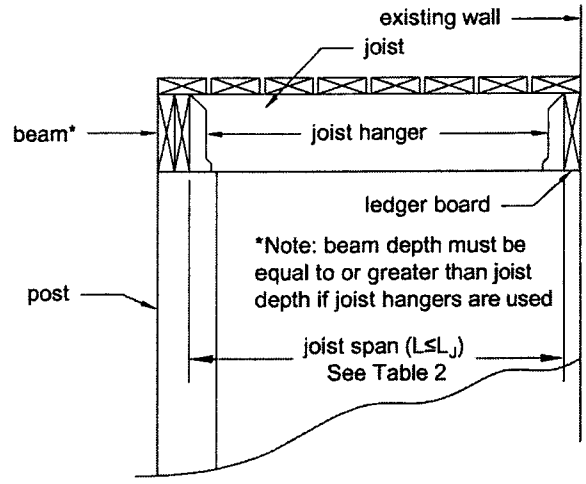


**Figure 2. Joist Span – Non-Ledger Deck.**

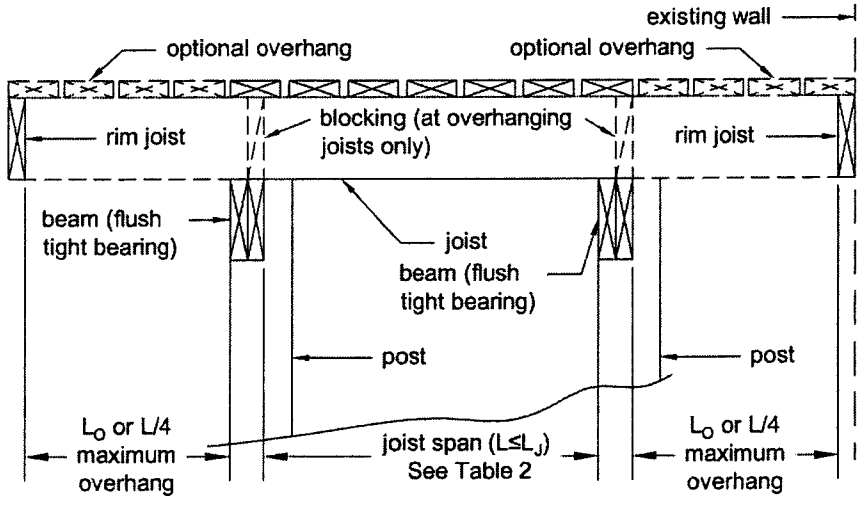


## BEAM SIZE & ASSEMBLY REQUIREMENTS

Deck beam spans shall be in accordance with Table 3 and can extend past the post face up to $L_B/4$ as shown in Figure 3. Joists may bear on the beam and extend past the beam face up to the lesser of $L_O$ or L/4 as shown in Figures 1A and 2, or the joists may attach to the side of the beam with joist hangers as shown in Figure 1B.

Joists shall not frame in from opposite sides of the same beam. See JOIST-TO-BEAM CONNECTION details, Figure 6.

Where multiple 2x members are used, the deck's beam is assembled by attaching the members identified in Table 3 in accordance with Figure 4 [Table R602.3(1)].

**Table 3A. Dimension Lumber Deck Beam Spans ($L_B$)[1] for Joists Framing from One Side Only.**

| | | Joist Spans (L) Less Than or Equal to: | | | | | | |
|---|---|---|---|---|---|---|---|---|
| **Species** | **Size[4]** | **6'** | **8'** | **10'** | **12'** | **14'** | **16'** | **18'** |
| **Southern Pine** | **2-2x6** | 6' - 8" | 5' - 8" | 5' - 1" | 4' - 7" | 4' - 3" | 4' - 0" | 3' - 9" |
| | **2-2x8** | 8' - 6" | 7' - 4" | 6' - 6" | 5' - 11" | 5' - 6" | 5' - 1" | 4' - 9" |
| | **2-2x10** | 10' - 1" | 8' - 9" | 7' - 9" | 7' - 1" | 6' - 6" | 6' - 1" | 5' - 9" |
| | **2-2x12** | 11' - 11" | 10' - 4" | 9' - 2" | 8' - 4" | 7' - 9" | 7' - 3" | 6' - 9" |
| | **3-2x6** | 7' - 11" | 7' - 2" | 6' - 5" | 5' - 10" | 5' - 5" | 5' - 0" | 4' - 9" |
| | **3-2x8** | 10' - 7" | 9' - 3" | 8' - 3" | 7' - 6" | 6' - 11" | 6' - 5" | 6' - 1" |
| | **3-2x10** | 12' - 9" | 11' - 0" | 9' - 9" | 8' - 9" | 8' - 3" | 7' - 8" | 7' - 3" |
| | **3-2x12** | 15' - 0" | 13' - 0" | 11' - 7" | 10' - 6" | 9' - 9" | 9' - 1" | 8' - 7" |
| **Douglas Fir-Larch[2], Hem-Fir[2], Spruce-Pine-Fir[2], Redwood, Western Cedars, Ponderosa Pine[3], Red Pine[3]** | **3x6 or 2-2x6** | 5' - 2" | 4' - 5" | 3' - 11" | 3' - 7" | 3' - 3" | 2' - 10" | 2' - 6" |
| | **3x8 or 2-2x8** | 6' - 7" | 5' - 8" | 5' - 1" | 4' - 7" | 4' - 3" | 3' - 10" | 3' - 5" |
| | **3x10 or 2-2x10** | 8' - 1" | 7' - 0" | 6' - 3" | 5' - 8" | 5' - 3" | 4' - 10" | 4' - 5" |
| | **3x12 or 2-2x12** | 9' - 5" | 8' - 2" | 7' - 3" | 6' - 7" | 6' - 1" | 5' - 8" | 5' - 4" |
| | **4x6** | 6' - 2" | 5' - 3" | 4' - 8" | 4' - 3" | 3' - 11" | 3' - 8" | 3' - 5" |
| | **4x8** | 8' - 2" | 7' - 0" | 6' - 3" | 5' - 8" | 5' - 3" | 4' - 11" | 4' - 7" |
| | **4x10** | 9' - 8" | 8' - 4" | 7' - 5" | 6' - 9" | 6' - 3" | 5' - 10" | 5' - 5" |
| | **4x12** | 11' - 2" | 9' - 8" | 8' - 7" | 7' - 10" | 7' - 3" | 6' - 9" | 6' - 4" |
| | **3-2x6** | 7' - 1" | 6' - 5" | 5' - 9" | 5' - 3" | 4' - 10" | 4' - 6" | 4' - 3" |
| | **3-2x8** | 9' - 5" | 8' - 3" | 7' - 4" | 6' - 8" | 6' - 2" | 5' - 9" | 5' - 5" |
| | **3-2x10** | 11' - 9" | 10' - 2" | 9' - 1" | 8' - 3" | 7' - 7" | 7' - 1" | 6' - 8" |
| | **3-2x12** | 13' - 8" | 11' - 10" | 10' - 6" | 9' - 7" | 8' - 10" | 8' - 3" | 7' - 10" |

1. Assumes 40 psf live load, 10 psf dead load, L/360 simple span beam deflection limit, cantilever length/180 deflection limit, No. 2 stress grade, and wet service conditions.
2. Incising assumed for Douglas fir-larch, hem-fir, and spruce-pine-fir.
3. Design values based on northern species with no incising assumed.
4. Beam depth must be equal to or greater than joist depth if joist hangers are used (see Figure 6, Option 3).

## Table 3B. Glued Laminated Timber Beam Spans ($L_B$)[1] for Joists Framing from One Side Only.

| Stress Class[2] | Width[3] | Depth[4] | Joist Spans (L) Less Than or Equal to: 6' | 8' | 10' | 12' | 14' | 16' | 18' |
|---|---|---|---|---|---|---|---|---|---|
| Balanced or Unbalanced 20F-1.5E And Higher Grade Cedar | 3-1/2" | 9-1/2" | 12'-2" | 10'-6" | 9'-4" | 8'-6" | 7'-10" | 7'-4" | 6'-11" |
| | | 11-7/8" | 15'-2" | 13'-1" | 11'-8" | 10'-8" | 9'-10" | 9'-2" | 8'-8" |
| | | 14" | 17'-10" | 15'-5" | 13'-9" | 12'-7" | 11'-7" | 10'-10" | 10'-2" |
| | 5-1/4" | 11-7/8" | 18'-0"[5] | 16'-8" | 14'-10" | 13'-7" | 12'-6" | 11'-8" | 11'-0" |
| | | 14" | 18'-0"[5] | 18'-0"[5] | 17'-6" | 15'-11" | 14'-9" | 13'-9" | 13'-0" |
| | | 16" | 18'-0"[5] | 18'-0"[5] | 18'-0"[5] | 18'-0"[5] | 16'-10" | 15'-9" | 14'-10" |
| Unbalanced 24F-1.8E Douglas Fir-Larch or Southern Pine | 3-1/2" | 9-1/2" | 13'-11" | 12'-1" | 10'-9" | 9'-10" | 9'-1" | 8'-6" | 8'-0" |
| | | 11-7/8" | 17'-5" | 15'-1" | 13'-5" | 12'-3" | 11'-4" | 10'-7" | 10'-0" |
| | | 14" | 18'-0"[5] | 17'-9" | 15'-10" | 14'-5" | 13'-4" | 12'-6" | 11'- 9" |
| | 5-1/4" | 11-7/8" | 18'-0"[5] | 18'-0"[5] | 17'-1" | 15'-7" | 14'-5" | 13'-6" | 12'-8" |
| | | 14" | 18'-0"[5] | 18'-0"[5] | 18'-0"[5] | 18'-0"[5] | 17'-0" | 15'-10" | 14'-11" |
| | | 16" | 18'-0"[5] | 18'-0"[5] | 18'-0"[5] | 18'-0"[5] | 18'-0"[5] | 18'-0"[5] | 17'-0" |
| Balanced 24F-1.8E Douglas Fir-Larch or Southern Pine | 3-1/2" | 9-1/2" | 13'-11" | 12'-7" | 11'-8" | 11'-0" | 10'-5" | 9'-11" | 9'-7" |
| | | 11-7/8" | 17'-5" | 15'-10" | 14'-8" | 13'-9" | 13'-1" | 12'-6" | 12'-0" |
| | | 14" | 18'-0"[5] | 18'-0"[5] | 17'-4" | 16'-3" | 15'-5" | 14'-9" | 14'-2" |
| | 5-1/4" | 11-7/8" | 18'-0"[5] | 18'-0"[5] | 17'-4" | 16'-3" | 15'-5" | 14'-9" | 14'-2" |
| | | 14" | 18'-0"[5] | 18'-0"[5] | 18'-0"[5] | 18'-0"[5] | 18'-0"[5] | 17'-6" | 16'-9" |
| | | 16" | 18'-0"[5] | 18'-0"[5] | 18'-0"[5] | 18'-0"[5] | 18'-0"[5] | 18'-0"[5] | 18'-0"[5] |

1. Assumes 40 psf live load, 10 psf dead load, L/360 simple span beam deflection limit, cantilever length/180 deflection limit. Glued laminated timber shall be naturally durable or preservative treated with an oil-borne treatment in accordance with AWPA U1. See MINIMUM REQUIREMENTS & LIMITATIONS.
2. Preservative treated structural composite lumber of equal or greater capacity can be substituted.
3. Beam widths of 3-1/8" or wider can be used for the tabulated 3-1/2" width, and beam widths of 5-1/8" or wider can be used for the tabulated 5-1/4" width.
4. Beam depth must be equal to or greater than joist depth if joist hangers are used (see Figure 6, Option 3).
5. Beam span prescriptively limited to 18'-0" for footing design.

## Figure 3. Beam Span.

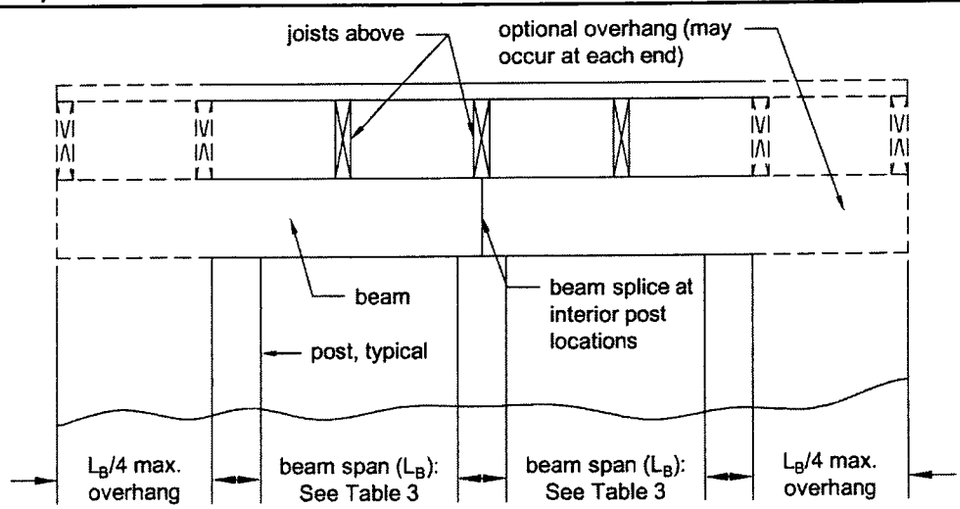

**Figure 4. Beam Assembly Details.**

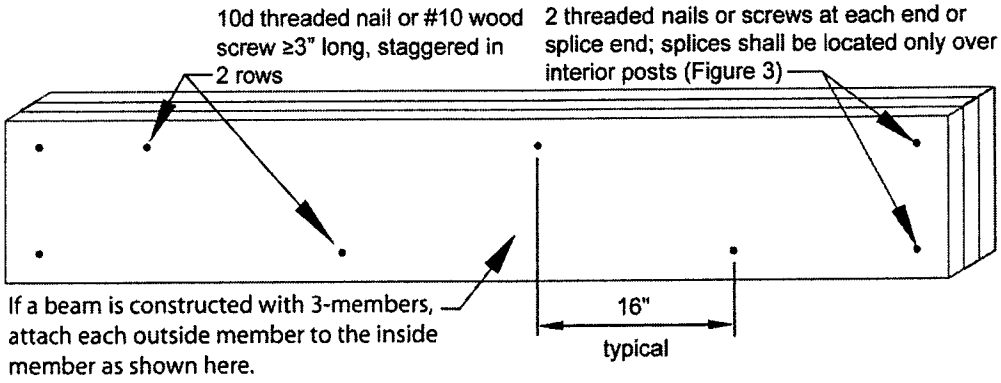


## DECK FRAMING PLAN

A framing plan shows the width, length, joist and beam layout; the location of the ledger board, posts, and footings; and the type, size, and spacing of the ledger board fasteners.

The overall deck length shall be equal to or less than the overall deck width. Stairs and stair landings shall not be included in determining the overall deck length or width. See Figure 5 for an example of a typical deck framing plan.

**Figure 5. Typical Deck Framing Plan.**

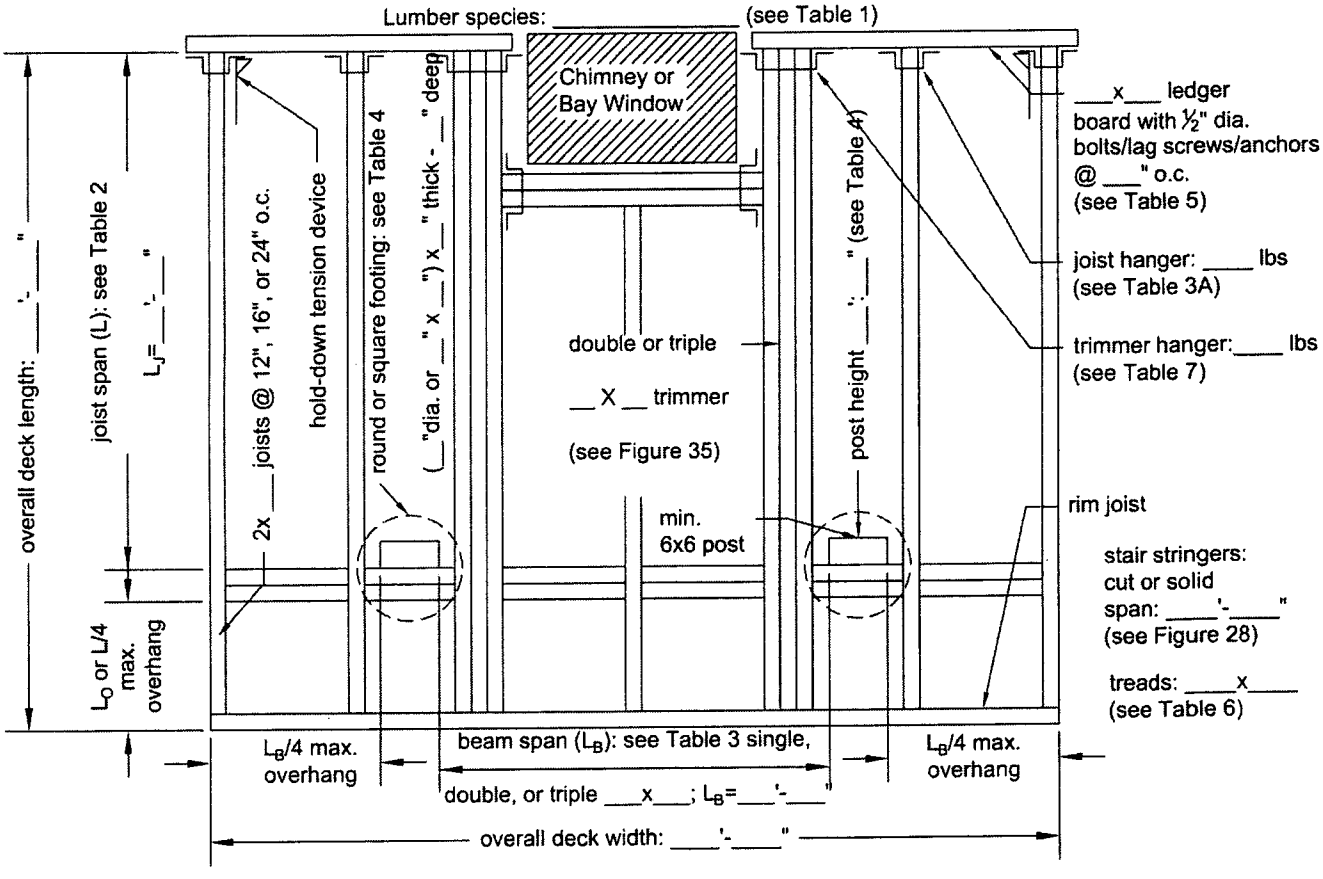

## JOIST-TO-BEAM CONNECTION

Each joist shall be attached to the beam as shown in Figure 6. Joists may bear on and overhang past the beam face the lesser of $L_O$ or L/4 when Option 1 or Option 2 is used to attach the joist to the beam and blocking is provided between joists at beam bearing. Mechanical fasteners or hurricane clips used as shown in Option 2 must have a minimum capacity of 100 lbs in both uplift and lateral load directions. Joists may also attach to the side of the beam with joist hangers per Option 3. Joists shall not frame in from opposite sides of the same beam. See JOIST HANGERS for more information. Hangers, clips, and mechanical fasteners shall be galvanized or stainless steel (see MINIMUM REQUIREMENTS).

**Figure 6. Joist-to-Beam Detail.**

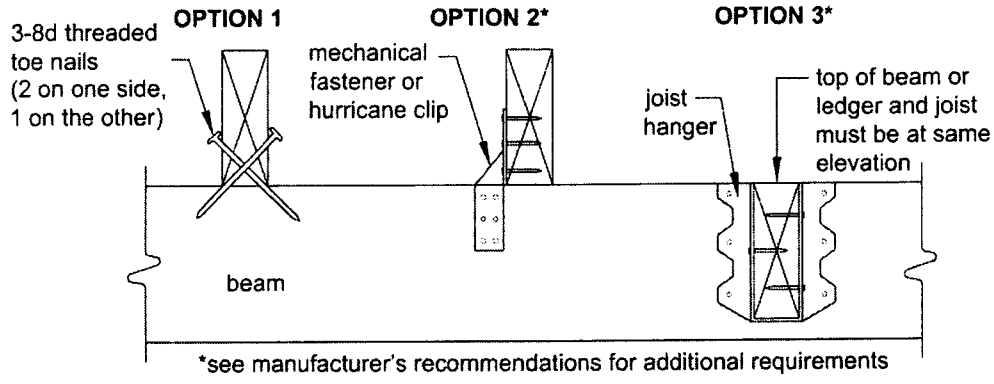


## JOIST HANGERS

Joist hangers, as shown in Figure 7, shall have a depth of at least 60% of ledger or beam depth. Each hanger shall have a minimum vertical capacity in accordance with Table 3A. The joist hanger shall be selected from an *approved* manufacturer's product data based on the dimensions of the joist or header it is carrying. Joist hangers and fasteners shall be corrosion resistant (see MINIMUM REQUIREMENTS).

Use joist hangers with inside flanges when clearances to the edge of the beam or ledger board dictate. **Do not use clip angles or brackets to support joists.**

**Table 3A. Joist Hanger Vertical Capacity.**

| Joist Size | Minimum Capacity, lbs |
|---|---|
| 2x6 | 400 |
| 2x8 | 500 |
| 2x10 | 600 |
| 2x12 | 700 |

**Figure 7. Typical Joist Hangers.**

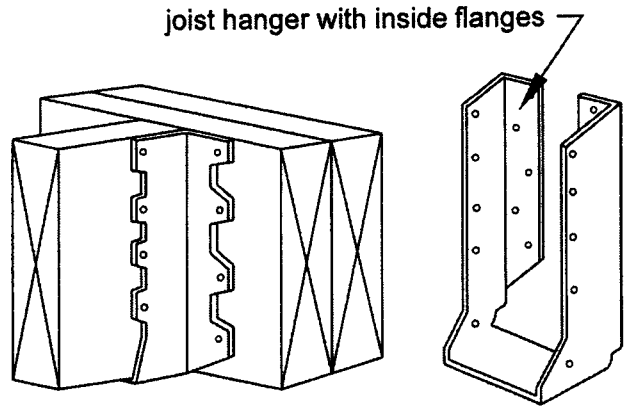

## POST REQUIREMENTS

All deck post sizes shall be 6x6 (nominal) or larger, and the maximum height shall be in accordance with Table 4 and measured from grade or top of foundation, whichever is highest, to the underside of the beam. Under prescriptive limits of this document, 8x8 nominal posts can be substituted anywhere in Table 4 but are limited to a maximum height of 14'-0". Posts shall be centered on footings. Cut ends and notches of posts shall be field treated with an *approved* preservative (such as copper naphthenate) [R402.1.2]. The beam shall be attached to the post by notching as shown in Figure 8A or by providing an *approved* post cap to connect the beam and post as shown in Figure 8B. All 3-ply beams shall be connected to the post by a post cap. All through-bolts shall have washers under the bolt head and nut. Attachment of the beam to the side of the post without notching is prohibited (see Figure 9).

Provide diagonal bracing parallel to the beam at each corner post greater than 2'-0" in height as shown in Figure 10. Diagonal bracing is prohibited on center posts. Bracing shall be fastened to the post at one end and the beam at the other with ½" diameter lag screws. For non-ledger decks, (see Figure 21) diagonal bracing may be omitted at the beam and posts adjacent to the house.

**Figure 8A. Post-to-Beam Attachment Requirements.**

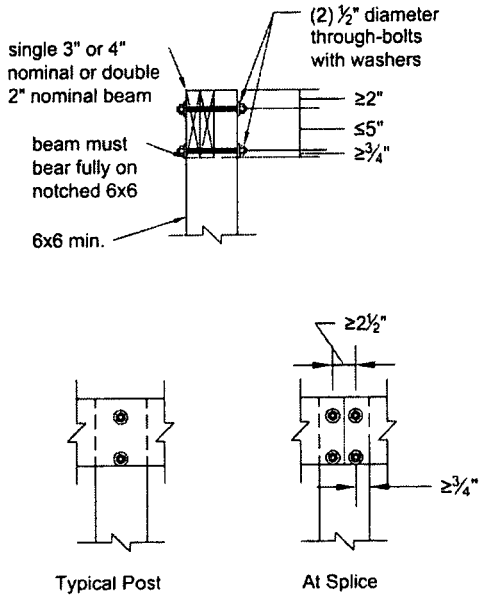


**Figure 8B. Alternate *Approved* Post-to-Beam Post Cap Attachment.**

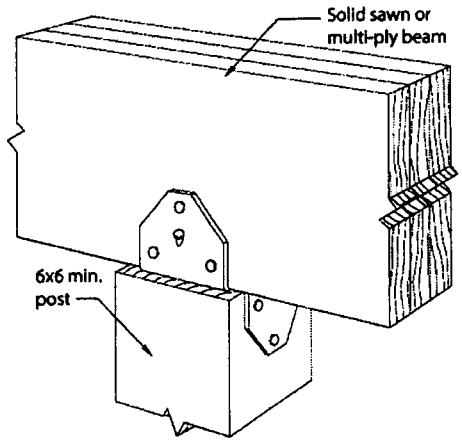


**Figure 9. Prohibited Post-to-Beam Attachment Condition.**

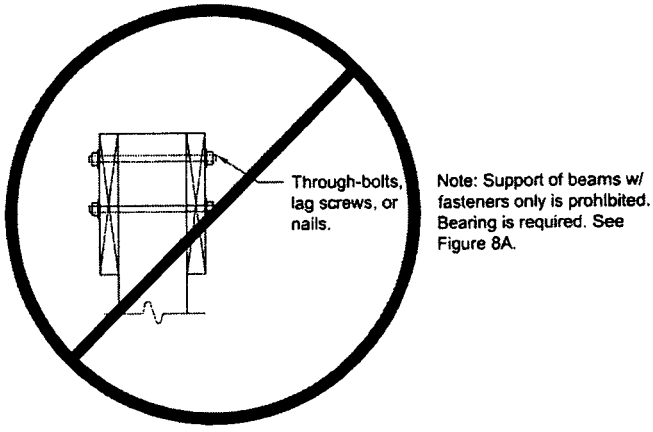


**Figure 10. Diagonal Bracing.**

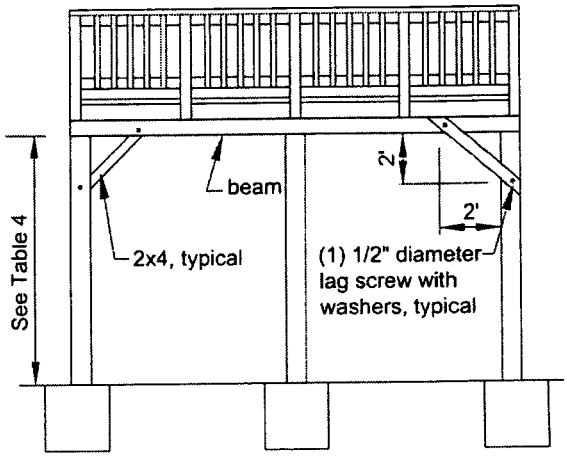


DIAGONAL BRACING PARALLEL TO BEAM
Note: Diagonal Bracing is prohibited on center posts.

## RIM JOIST REQUIREMENTS

Attach a continuous rim joist to the ends of joists as shown in Figure 11. Attach decking to the rim joist as shown in Figure 11. For more decking attachment requirements, see DECKING REQUIREMENTS.

**Figure 11. Rim Joist Connection Details.**

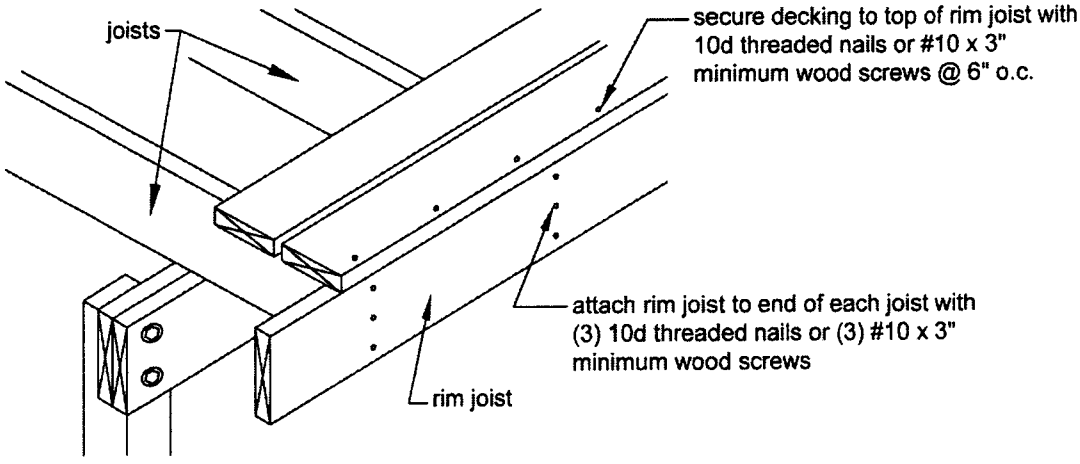


## FOOTINGS [R403]

See Figure 12 and Table 4 for footing size, footing thickness, and post attachment options and requirements. All footings shall bear on undisturbed soil at least 12 inches below the undisturbed ground surface or below the frost line, whichever is deeper. Contact the authority having jurisdiction to determine the specified frost line. Bearing conditions shall be verified in the field by the building official prior to placement of concrete. Where the building official determines that in-place soils with an allowable bearing capacity of less than 1,500 psf are likely to be present at the site, the allowable bearing capacity shall be determined by a soils investigation.

DECK FOOTINGS CLOSER THAN 5'-0" TO AN EXTERIOR HOUSE FOUNDATION WALL MUST BEAR AT THE SAME ELEVATION AS THE FOOTING OF THE HOUSE FOUNDATION.

**Do not construct footings over septic systems or leach fields, utility lines, or enclosed meters. Contact local utilities (call 811) before digging.**

Pre-manufactured post anchors shall be galvanized. See MINIMUM REQUIREMENTS.

**Table 4. Post Height for 6x6[5] and Footing Sizes for all Posts.**

| Beam Span, $L_B$ | Joist Span $L_J$ | Post Heights[1] | | | | | Footing Sizes[2] | | |
|---|---|---|---|---|---|---|---|---|---|
| | | Southern Pine | Douglas Fir-Larch[3] | Hem-Fir[3], Western Cedars | Redwood | Ponderosa Pine, Red Pine, SPF[3] | Round Footing Diameter | Square Footing | Footing Thickness[4] |
| 6' | ≤10' | 14' | 14' | 14' | 14' | 14' | 18" | 16"x16" | 7" |
| | ≤14' | 14' | 14' | 14' | 14' | 14' | 21" | 18"x18" | 8" |
| | ≤18' | 14' | 14' | 12' | 14' | 11' | 24" | 21"x21" | 10" |
| 8' | ≤10' | 14' | 14' | 14' | 14' | 14' | 20" | 18"x18" | 8" |
| | ≤14' | 14' | 14' | 14' | 14' | 11' | 24" | 21"x21" | 10" |
| | ≤18' | 14' | 13' | 11' | 12' | 8' | 27" | 24"x24" | 11" |
| 10' | ≤10' | 14' | 14' | 14' | 14' | 12' | 23" | 20"x20" | 9" |
| | ≤14' | 14' | 13' | 11' | 13' | 8' | 27" | 24"x24" | 11" |
| | ≤18' | 12' | 11' | 8' | 11' | 2' | 31" | 27"x27" | 13" |
| 12' | ≤10' | 14' | 14' | 12' | 14' | 10' | 25" | 22"x22" | 10" |
| | ≤14' | 13' | 12' | 9' | 11' | 5' | 30" | 26"x26" | 13" |
| | ≤18' | 11' | 9' | 6' | 9' | 2' | 34" | 30"x30" | 15" |
| 14' | ≤10' | 14' | 13' | 11' | 13' | 8' | 27" | 24"x24" | 11" |
| | ≤14' | 11' | 10' | 7' | 10' | 2' | 32" | 29"x29" | 14" |
| | ≤18' | 9' | 8' | 2' | 8' | NP | 37" | 33"x33" | 16" |
| 16' | ≤10' | 13' | 12' | 10' | 12' | 6' | 29" | 26"x26" | 12" |
| | ≤14' | 10' | 9' | 5' | 9' | 2' | 35" | 31"x31" | 15" |
| | ≤18' | 7' | 5' | 2' | 7' | NP | 40" | 35"x35" | 18" |
| 18' | ≤10' | 12' | 11' | 8' | 11' | 2' | 31" | 27"x27" | 13" |
| | ≤14' | 9' | 8' | 2' | 8' | NP | 37" | 33"x33" | 16" |
| | ≤18' | 5' | 2' | 2' | 6' | NP | 42" | 37"x37" | 19" |

1. Assumes 40 psf live load, 10 psf dead load, $L_B/4$ and $L_J/4$ overhangs, No 2. Stress grade and wet service conditions.
2. Assumes 1,500 psf soil bearing capacity and 150 pcf concrete. Value may be multiplied by 0.9 for corner posts.
3. Incising assumed for Douglas fir-larch, hem-fir, and spruce-pine-fir.
4. Assumes 2,500 psi compressive strength of concrete. Coordinate footing thickness with post base and anchor requirements.
5. 8x8 nominal posts may be substituted anywhere in Table 4 to a maximum height of 14'.

**Figure 12. Typical Footing Options.**

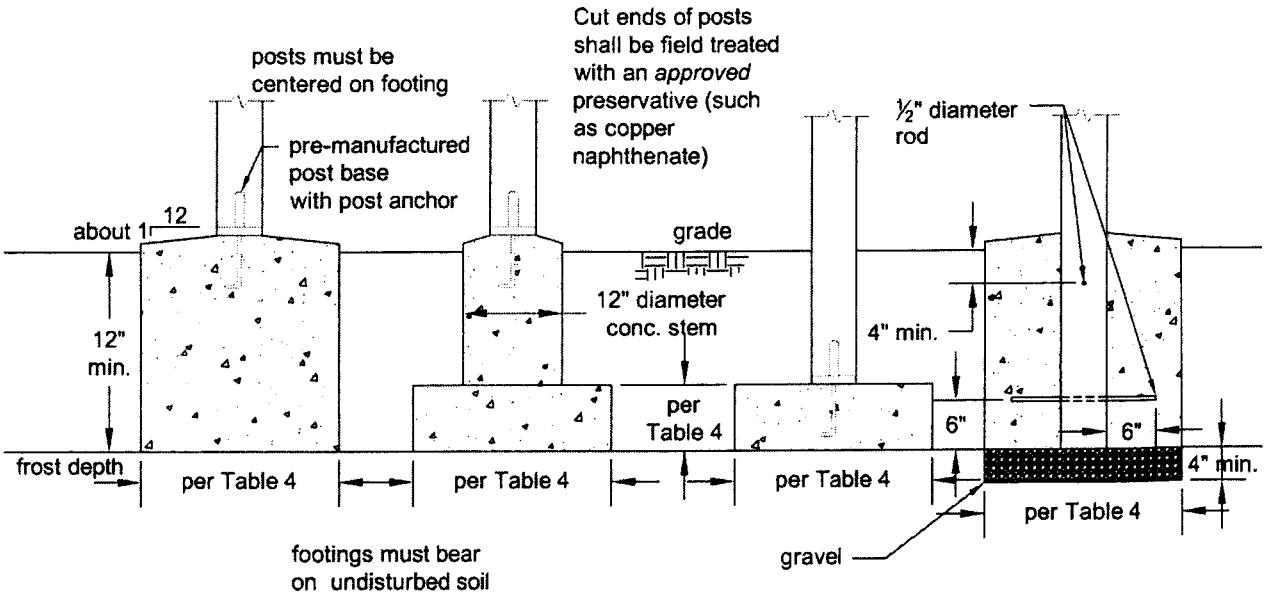


## LEDGER ATTACHMENT REQUIREMENTS [R507]

**GENERAL**: Attach the ledger board, which shall be equal to or greater than the deck joist depth but less than or equal to the rim joist depth, to the house in accordance with Figures 14 and 15. The ledger shall be a minimum nominal 2x8. When attachments are made to the house band joist, the band joist shall be capable of supporting the new deck. If this cannot be verified or conditions at the house differ from the details herein, then either a non-ledger deck or full plan submission is required. See NON-LEDGER DECKS.

**SIDING AND FLASHING**: House siding or the exterior finish system must be removed prior to installation of the ledger board. *Approved* corrosion resistant flashing is required at any ledger board connection to a wall of wood framed construction (see MINIMUM REQUIREMENTS). See Figure 14 for continuous flashing with drip edge. The threshold shall be carefully flashed and caulked to prevent water intrusion due to splash from the deck or melting snow and ice.

**MANUFACTURED WOOD I-JOIST:** The term "I-Joist" denotes manufactured wood "I" joists (see Figure 13A). Many new homes constructed with wood I-joists include 1" or thicker engineered wood products (EWP) – such as oriented strand board (OSB) or structural composite lumber (SCL) including laminated veneer lumber (LVL) – as band joists (or rim joists) that can support the attachment of a deck (see Figure 14). However, some older homes might be constructed with band boards that are too thin (less than 1") to support a deck. In such cases, a non-ledger deck or a full plan submission is required.

**MANUFACTURED WOOD TRUSS:** A metal plate connected wood truss (MPCWT) is an engineered, prefabricated structural component designed for each specific application. MPCWT's used in residential floors are often installed with a 2x4 lumber "ribbon" at the ends of the trusses (see Figure 13B) to tie the ends of the trusses together. The ribbon board, by itself, is not intended to support the deck ledger and deck. Installing residential decks when the floor system for the house uses MPCWT requires a standard detail provided by the truss designer, a non-ledger deck, or a full plan submission. Refer to the Technical Note – *Attachment of Residential Deck Ledger to Metal Plate Connected Wood Truss Floor System* for special blocking details and attachment requirements (www.sbcindustry.com).

**Figure 13A. Wood I-Joist Profile.**

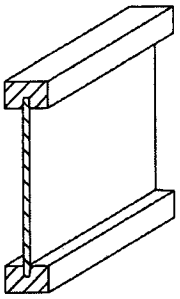

**Figure 13B. Metal Plate Connected (MPC) Wood Floor Trusses with a 2x4 Lumber "Ribbon" at the Ends of the Trusses.**

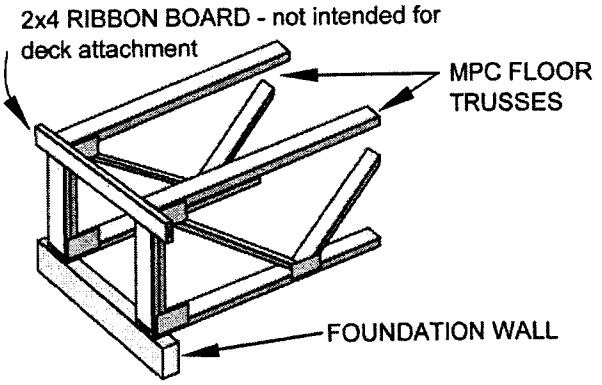


**Figure 14. General Attachment of Ledger Board to Band Joist or Rim Joist.**

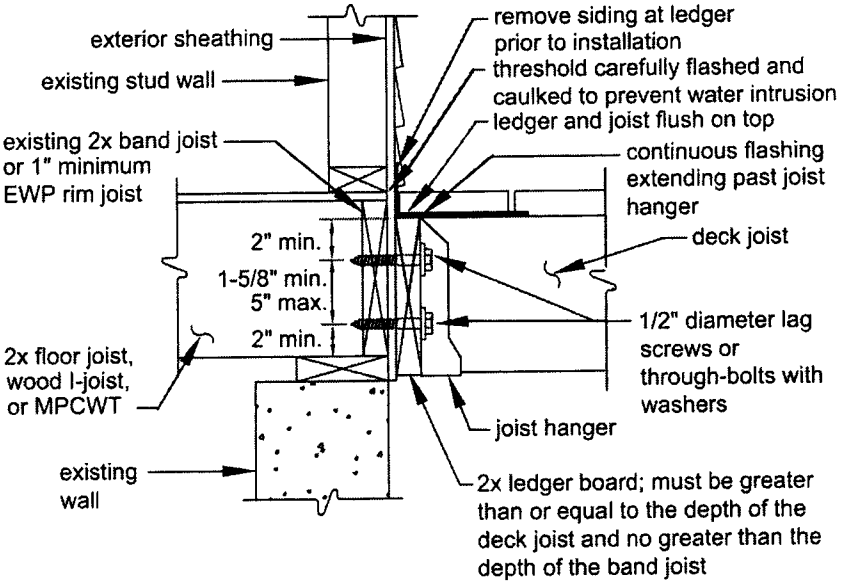


**Figure 15. Attachment of Ledger Board to Foundation Wall (Concrete or Solid Masonry).**

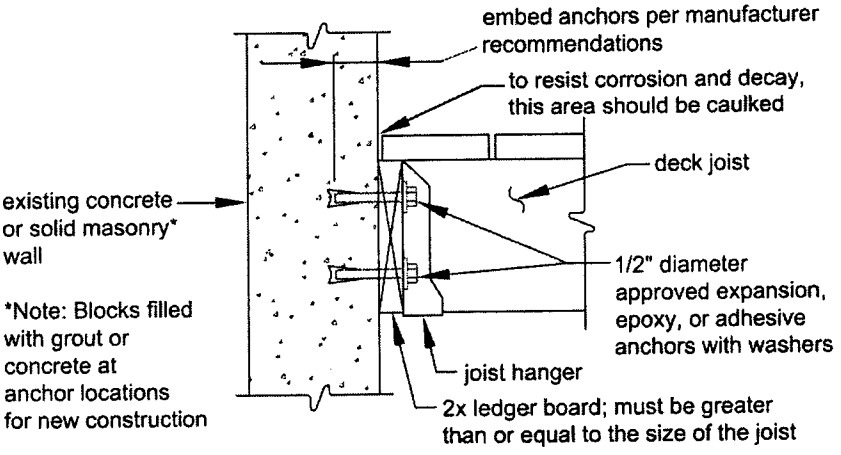

## PROHIBITED LEDGER ATTACHMENTS

Attachments to exterior veneers (brick, masonry, stone), hollow masonry, and to cantilevered floor overhangs or bay windows are prohibited (see Figures 17 and 18). In such cases, the non-ledger deck is required (See NON-LEDGER DECKS).

**Figure 17. No Attachment to or Through Exterior Veneers (Brick, Masonry, Stone).**

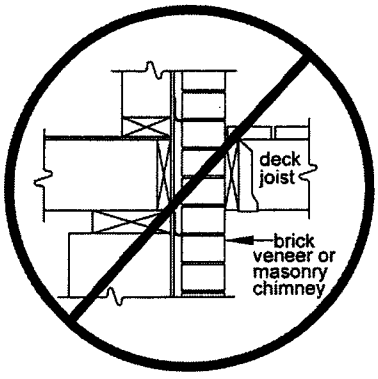


**Figure 18. No Attachment to House Overhang with Ledger.**

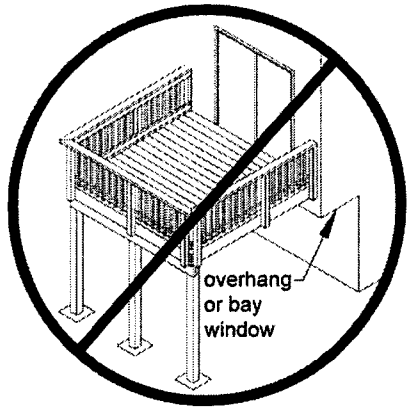


## LEDGER BOARD FASTENERS

Only those fasteners noted below are permitted. LEAD ANCHORS ARE PROHIBITED.

**Deck ledger connection to band joist or rim joist.** The connection between a deck ledger and a 2-inch nominal lumber band joist (1-½" actual) or EWP rim joist bearing on a sill plate or wall plate shall be constructed with ½" lag screws or bolts with washers per Table 5 and Figure 19 (see MINIMUM REQUIREMENTS).

**Table 5. Fastener Spacing for a Southern Pine, Douglas Fir-Larch, or Hem-Fir Deck Ledger or Rim Joist and a 2-inch Nominal Solid-Sawn Spruce-Pine-Fir Band Joist or EWP Rim Joist.**[3,4,5,6,8]
(Deck Live Load = 40 psf, Deck Dead Load = 10 psf)

| Joist Span | Rim Joist or Band Joist | 6'-0" and less | 6'-1" to 8'-0" | 8'-1" to 10'-0" | 10'-1" to 12'-0" | 12'-1" to 14'-0" | 14'-1" to 16'-0" | 16'-1" to 18'-0" |
|---|---|---|---|---|---|---|---|---|
| **Connection Details** | **On-Center Spacing of Fasteners** | | | | | | | |
| **½" diameter lag screw[1] with 15/32" maximum sheathing** | 1" EWP | 24" | 18" | 14" | 12" | 10" | 9" | 8" |
| | 1-1/8" EWP | 28" | 21" | 16" | 14" | 12" | 10" | 9" |
| | 1-½" Lumber | 30" | 23" | 18" | 15" | 13" | 11" | 10" |
| **½" diameter bolt with 15/32" maximum sheathing** | 1" EWP | 24" | 18" | 14" | 12" | 10" | 9" | 8" |
| | 1-1/8" EWP | 28" | 21" | 16" | 14" | 12" | 10" | 9" |
| | 1-½" Lumber | 36" | 36" | 34" | 29" | 24" | 21" | 19" |
| **½" diameter bolt with 15/32" maximum sheathing and ½" stacked washers[2,7]** | 1-½" Lumber | 36" | 36" | 29" | 24" | 21" | 18" | 16" |

1. The tip of the lag screw shall fully extend beyond the inside face of the band joist.
2. The maximum gap between the face of the ledger board and face of the wall sheathing shall be ½".
3. Ledgers shall be flashed or caulked to prevent water from contacting the house band joist (see Figures 14 and 15).
4. Lag screws and bolts shall be staggered per Figure 19.
5. Deck ledgers shall be minimum 2x8 pressure-preservative-treated No.2 grade lumber, or other *approved* materials as established by standard engineering practice.
6. When solid-sawn pressure-preservative-treated deck ledgers are attached to engineered wood products (minimum 1" thick wood structural panel band joist or structural composite lumber including laminated veneer lumber), the ledger attachment shall be designed in accordance with accepted engineering practice. Tabulated values based on 300 lbs and 350 lbs for 1" and 1-1/8" EWP rim joist, respectively.
7. Wood structural panel sheathing, gypsum board sheathing, or foam sheathing shall be permitted between the band joist and rim joist. Stacked washers are permitted in combination with wood structural panel sheathing, but are not permitted in combination with gypsum board or foam sheathing. The maximum distance between the face of the ledger board and the face of the band joist shall be 1".
8. Fastener spacing also applies to southern pine, Douglas fir-larch, and hem-fir band joists.

**Placement of lag screws or bolts in deck ledgers**
The lag screws or bolts shall be placed as shown in Figure 19. The lag screws or bolts shall be staggered from the top to the bottom along the horizontal run of the deck ledger (see Figure 19). Proper installation of lag screws or bolts shall be verified by the authority having jurisdiction.

**Figure 19. Ledger Board Fastener Spacing and Clearances.**

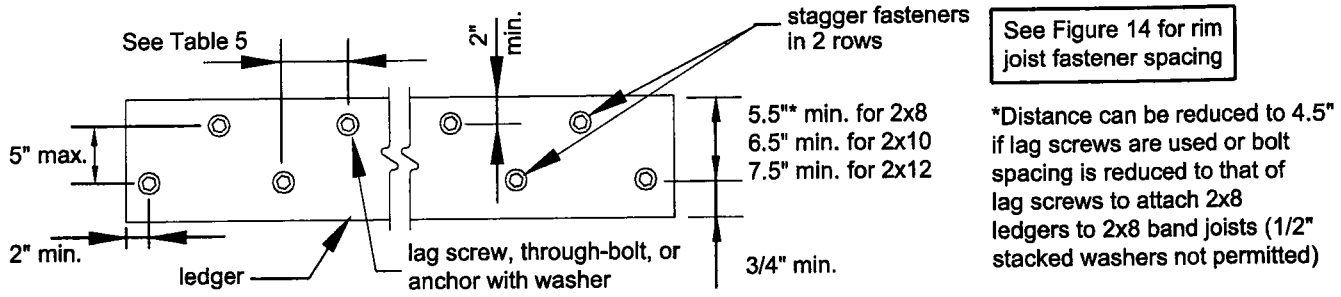


*Through-Bolts*
Through-bolts shall have a diameter of ½". Pilot holes for through-bolts shall be $^{17}/_{32}$" to $^{9}/_{16}$" in diameter. Through-bolts require washers at the bolt head and nut.

*Expansion and Adhesive Anchors*
Use *approved* expansion or adhesive anchors when attaching a ledger board to a concrete or solid masonry wall as shown in Figure 15. Expansion and adhesive anchor bolts shall have a diameter of ½". Minimum spacing and embedment length shall be per the manufacturer's recommendations. All anchors must have washers.

*Lag Screws*
Lag screws shall have a diameter of ½" (see MINIMUM REQUIREMENTS). Lag screws may be used only when the field conditions conform to those shown in Figure 14. See Figure 20 for lag screw length and shank requirements. All lag screws shall be installed with washers.

**Figure 20. Lag Screw Requirements.**

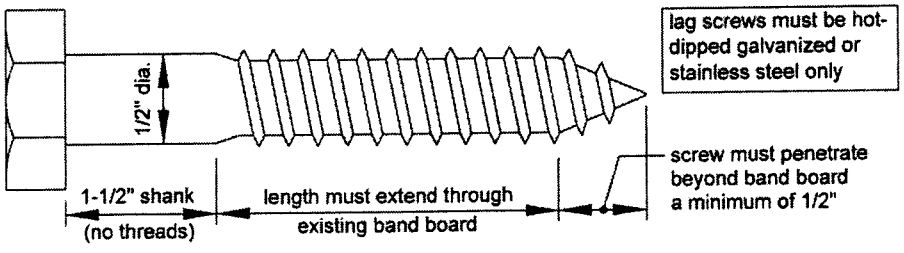


**Lag screw installation requirements:** Each lag screw shall have pilot holes drilled as follows: 1) Drill a ½" diameter hole in the ledger board, 2) Drill a $^{5}/_{16}$" diameter hole into the band board of the house. DO NOT DRILL A ½" DIAMETER HOLE INTO THE BAND BOARD.

The threaded portion of the lag screw shall be inserted into the pilot hole by turning. DO NOT DRIVE LAG SCREWS WITH A HAMMER. Use soap or a wood-compatible lubricant as required to facilitate tightening. Each lag screw shall be thoroughly tightened (snug but not over-tightened to avoid wood damage).

## NON-LEDGER DECKS - FOR RESISTING VERTICAL LOADS

Non-ledger decks use the house for resisting lateral loads but do not utilize the exterior wall of the house to support vertical loads (see Figure 21). Rather than supporting the deck on a ledger, an additional beam with posts is provided at or within the lesser of $L_O$ or L/4 of the house. THE ASSOCIATED DECK POST FOOTINGS SHALL BE PLACED AT THE SAME ELEVATION AS THE HOUSE FOOTING IF LOCATED CLOSER THAN 5'-0" TO A HOUSE WALL (see Figure 2 and Figure 12). For houses with basements, a cylindrical footing (caisson) is recommended to minimize required excavation at the basement wall. Beam size is determined by Table 3. Non-ledger decks shall be attached to the house per Table 5 and Figures 22 or 23 for lateral loads.

**Figure 21. Non-Ledger Deck - For Resisting Vertical Loads.**

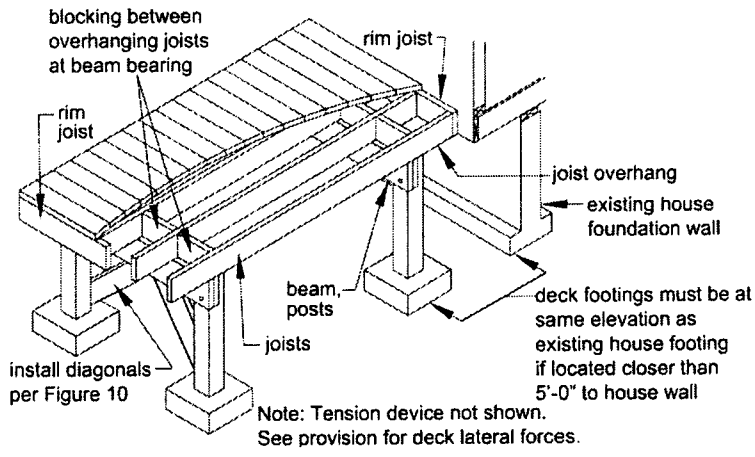


## DECK LATERAL LOADS

**Attachment to House:** Decks shall be positively anchored to the primary structure [R507.1]. The lateral connection required shall be permitted to be in accordance with Figure 22 or 23 for ledger and non-ledger decks. Hold-down tension devices shall be provided in not less than two locations, and shall have an allowable stress design capacity of not less than 1,500 lb [R507.2.3].

The wall must be sheathed with minimum $^3/_8$" wood structural panel sheathing. Use lag screws or through-bolts when fastening to a band joist; use expansion anchors or epoxy anchors when fastening to concrete or masonry. DO NOT ATTACH TO BRICK VENEERS. VERIFY THIS CONDITION IN THE FIELD PRIOR TO UTILIZING THIS METHOD. Fasteners shall penetrate beyond the house band board and be installed per Table 5.

For non-ledger decks, blocking or framing angles can be used in lieu of joist hangers and shall be provided on each side of each joist. Blocking shall be installed with 5-10d threaded nails into the rim joist or the framing angle shall have a lateral capacity of 600 lb. Flashing over the rim joist is required and must be installed in accordance with the flashing provisions in the LEDGER ATTACHMENT REQUIREMENTS.

## Figure 22. Lateral Load Device with Joists Parallel to Deck Joists.

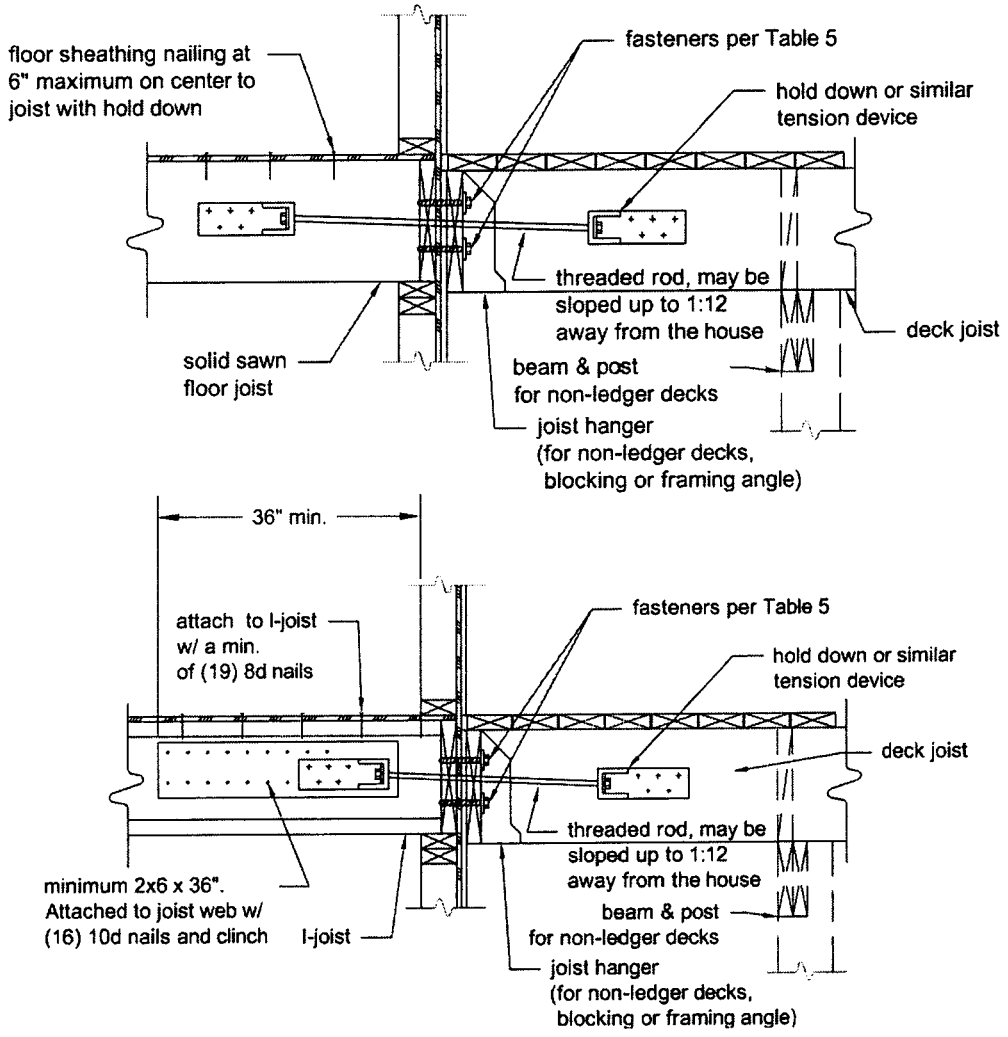


## Figure 23. Lateral Load Device with Joists Perpendicular to Deck Joists.

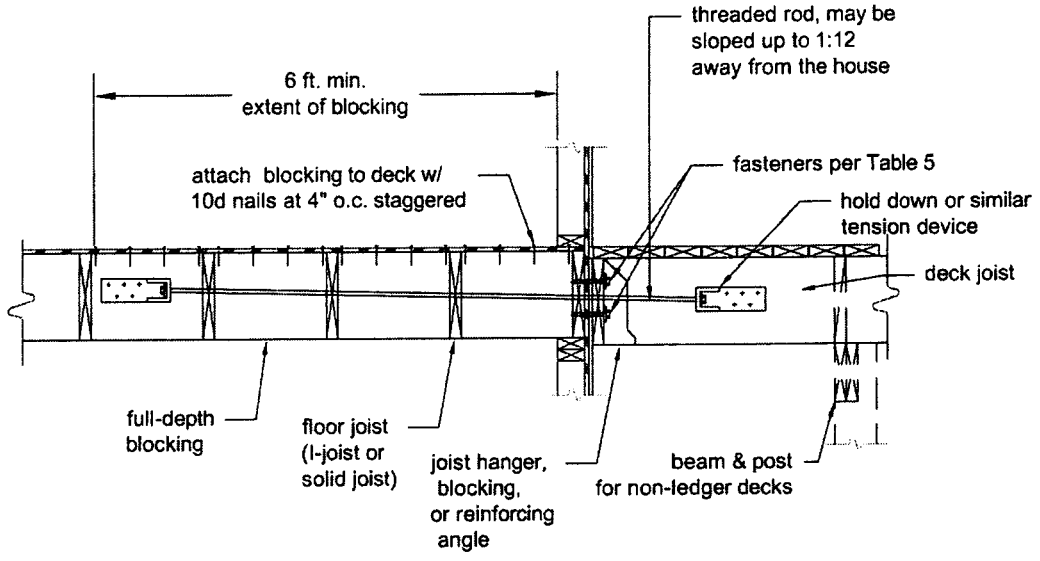

## GUARD REQUIREMENTS

All decks greater than 30" above grade are required to have a guard [R312.1] - one example is shown in Figure 24. Other methods and materials may be used for guard construction when *approved* by the authority having jurisdiction.

**Figure 24. Example Guard Detail.**

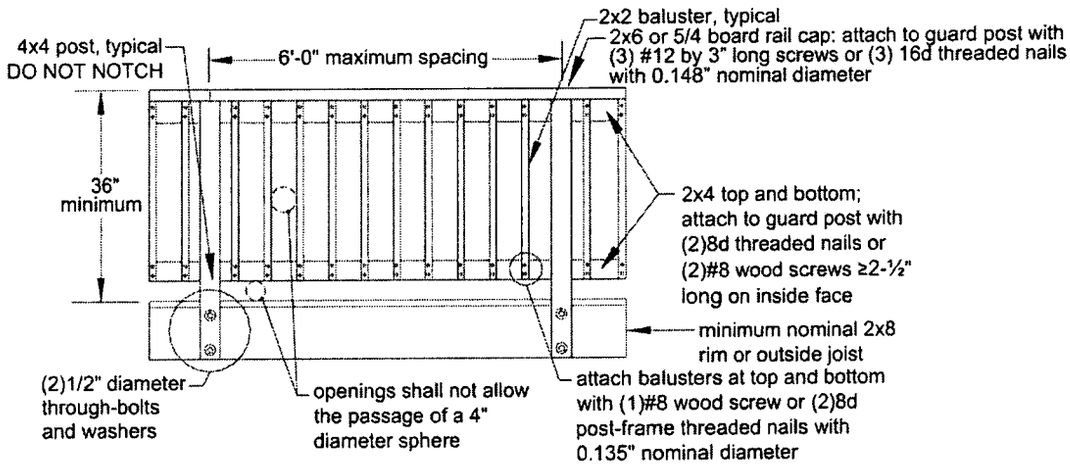


## GUARD POST ATTACHMENTS FOR REQUIRED GUARDS

Deck guard posts for required guards shall be a minimum 4x4 (nominal) with an adjusted bending design value not less than 1,100 psi. Outside-joists and rim joists to which guard posts are attached shall be a minimum of 2x8 (nominal).

Guard posts for required guards which run parallel to the deck joists shall be attached to the outside joist per Figure 25. Guard posts for required guards that run perpendicular to the deck joists shall be attached to the rim joist in accordance with Figure 26. Only hold-down anchor models meeting these minimum requirements shall be used. Hold-down anchors shall have a minimum allowable tension load of 1,800 pounds for a 36" maximum guard height and be installed in accordance with the manufacturer's instructions.

**Figure 25. Guard Post to Outside-Joist Example.**

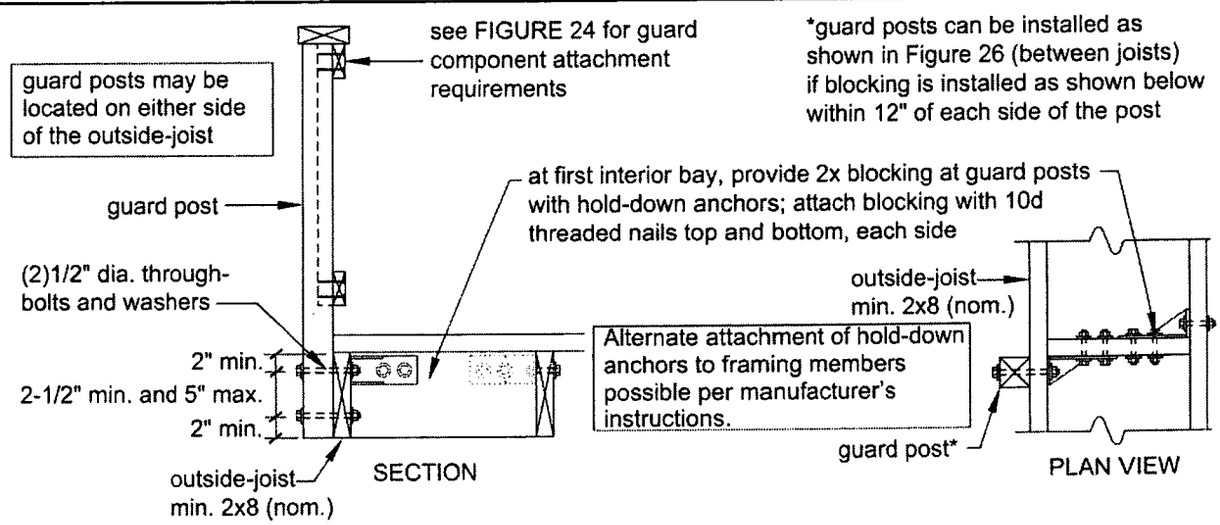

**Figure 26. Guard Post to Rim Joist Example.**

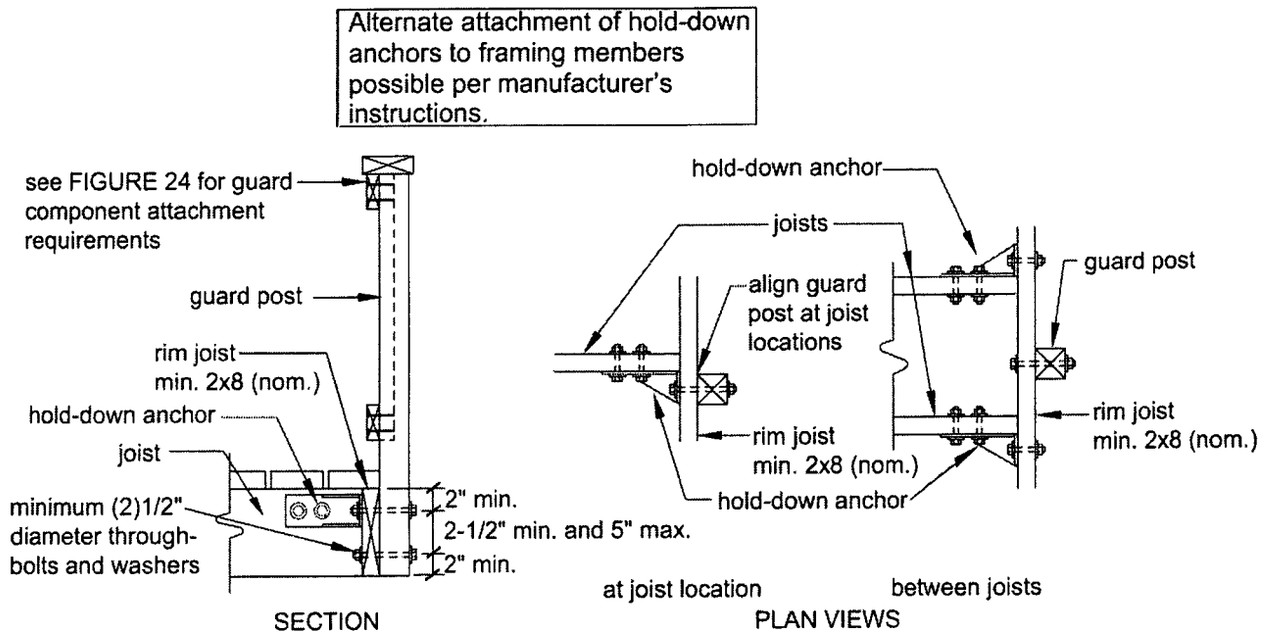


## STAIR REQUIREMENTS

Stairs, stair stringers, and stair guards shall meet the requirements shown in Figure 27 through Figure 34 and Table 6 except where amended by the local jurisdiction. All stringers shall be a minimum of 2x12. Stair stringers shall not span more than the dimensions shown in Figure 28. If the stringer span exceeds these dimensions, then a 4x4 post may be provided to support the stringer and shorten its span length. The 4x4 post shall be notched and bolted to the stringer with (2) ½" diameter through-bolts with washers per Figure 8A. The post shall be centered on a 12" diameter or 10" square, 6" thick footing. The footing shall be constructed as shown in Figure 34 and attached to the post as shown in Figure 12. An intermediate landing may also be provided to shorten the stringer span (see provisions below). If the total vertical height of a stairway exceeds 12'-0", then an intermediate landing shall be required. All intermediate stair landings must be designed and constructed as a non-ledger deck using the details in this document. Stairs shall be a minimum of 36" in width as shown in Figure 33 [R311.7]. If only cut stringers are used, a minimum of three are required. For stairs greater than 36" in width, a combination of cut and solid stringers can be used, but shall be placed at a maximum spacing of 18" on center (see Figure 29). The width of each landing shall not be less than the width of the stairway served. Every rectangular landing shall have a minimum dimension of 36" measured in the direction of travel and no less than the width of the stairway served [R311.7].

**Figure 27. Tread and Riser Detail.**

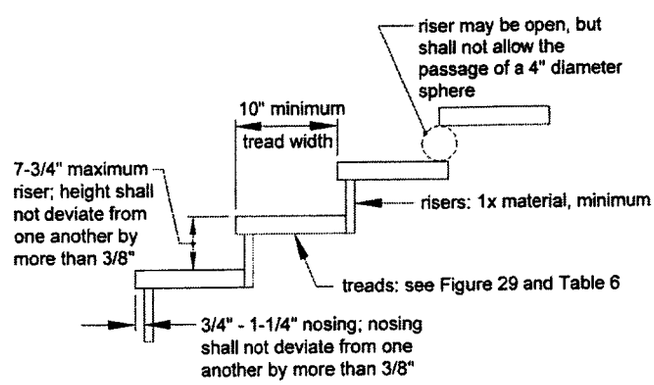

## Figure 28. Stair Stringer Requirements.

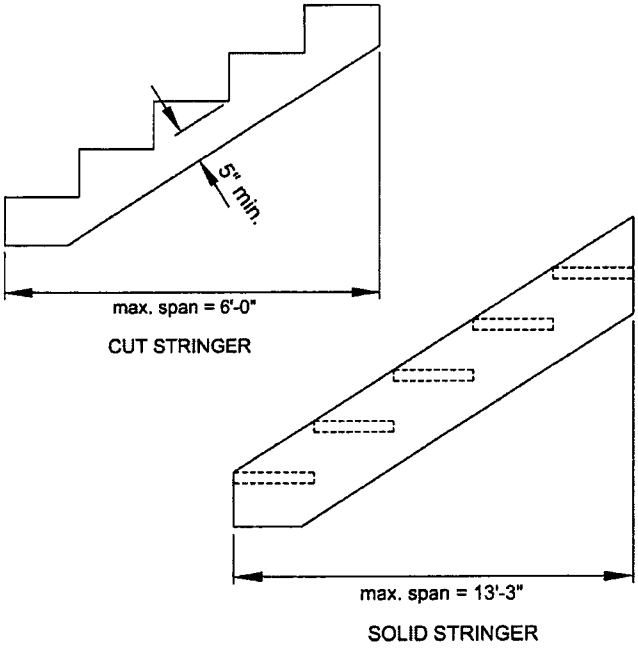


## Figure 29. Tread Connection Requirements.

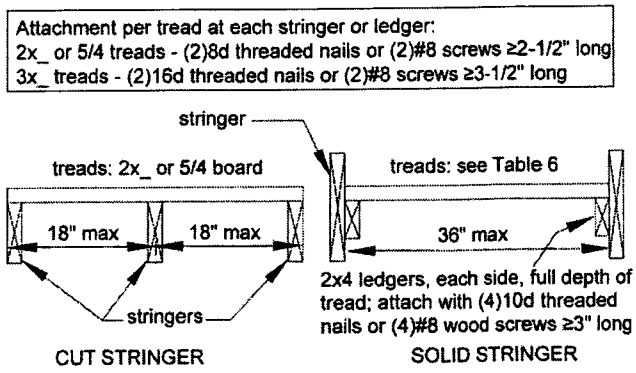


## Figure 30. Stair Guard Requirements.

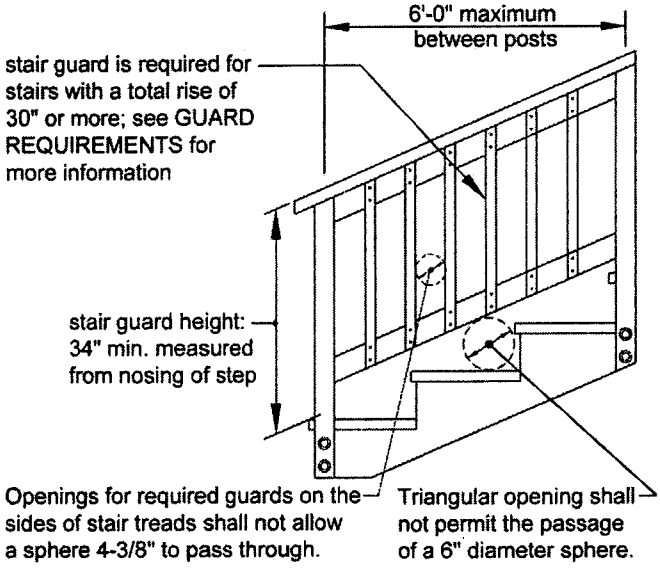


## Figure 31. Stair Stringer Attachment Detail.

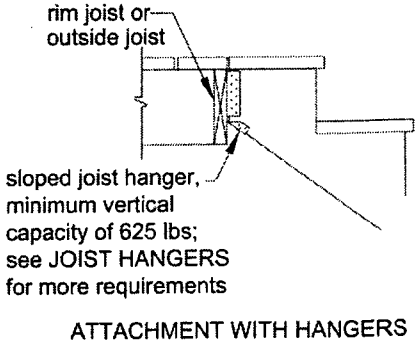


**Table 6. Minimum Tread Size for Cut and Solid Stringers.**[1]

| Species | Cut Stringer | Solid Stringer |
|---|---|---|
| Southern Pine | 2x4 or 5/4 | 2x8 |
| Douglas Fir Larch, Hem-Fir, SPF[2] | 2x4 or 5/4 | 2x8 or 3x4 |
| Redwood, Western Cedars, Ponderosa Pine,[3] Red Pine[3] | 2x4 or 5/4 | 2x10 or 3x4 |

1. Assumes 300 lb concentrated load, L/288 deflection limit, No. 2 stress grade, and wet service conditions.
2. Incising assumed for Douglas fir-larch, hem-fir, and spruce-pine-fir.
3. Design values based on northern species with no incising assumed.

## STAIR HANDRAIL REQUIREMENTS

All stairs with 4 or more risers shall have a handrail on at least one side (see Figure 32A) [R311.7.8]. The handrail height measured vertically from the sloped plane adjoining the tread nosing shall be not less than 34 inches and not more than 38 inches (see Figure 30) [R311.7.8.1]. Handrails shall be graspable and shall be composed of decay-resistant and/or corrosion resistant material. Handrails shall be Type I, Type II, or provide equivalent graspability (see Figure 32B). Type I shall have a perimeter dimension of at least 4" and not greater than 6-¼". Type II rails with a perimeter greater than 6-¼" shall provide a graspable finger recess area on both sides of the profile [R311.7.8.3]. All shapes shall have a smooth surface with no sharp corners. Handrails shall run continuously from a point directly over the lowest riser to a point directly over the highest riser and shall return to the guard at each end (see Figure 33). Handrails may be interrupted by guard posts at a turn in the stair [R311.7.8.2].

### Figure 32A. Handrail Mounting Examples.

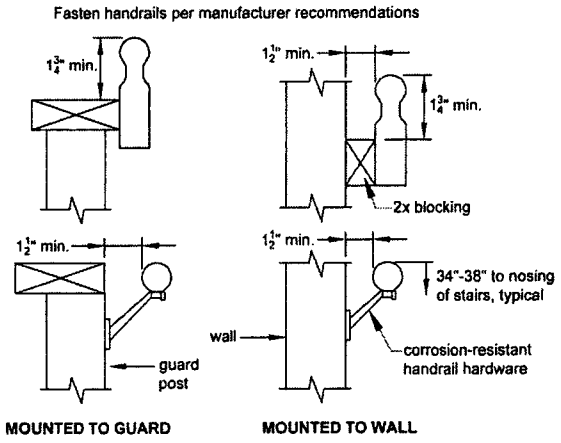


### Figure 32B. Handrail Grip Size.

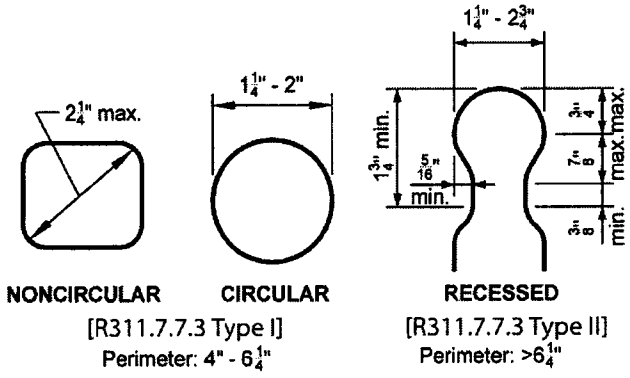


## STAIR FOOTING REQUIREMENTS [R403]

Where the stairway meets grade, attach the stringers to the stair guard posts as shown in Figure 34. Posts shall bear on footings. All footings shall bear on solid ground and shall be placed at least 12 inches below the undisturbed ground surface or below the frost line, whichever is deeper (see Figure 34). Stringers shall bear on a 2x4 bearing block attached to the post as shown. Stringers shall not bear on new or existing concrete pads or patios that are not founded below this depth. When guards are not required (see GUARD REQUIREMENTS), posts may terminate below the bottom tread elevation. Bolts are only required if a guard post is required.

## STAIR LIGHTING REQUIREMENTS [R303.7]

Stairways shall have a light source located at the top landing such that all stairs and landings are illuminated. The light switch shall be operated from inside the house. However, motion detected or timed switches are acceptable.

### Figure 33. Miscellaneous Stair Requirements.

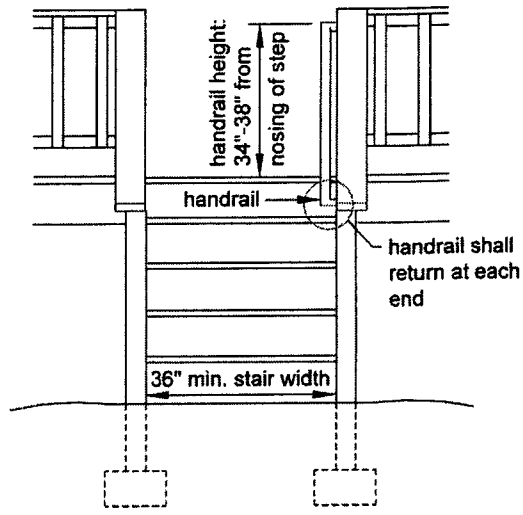


### Figure 34. Stair Footing Detail.

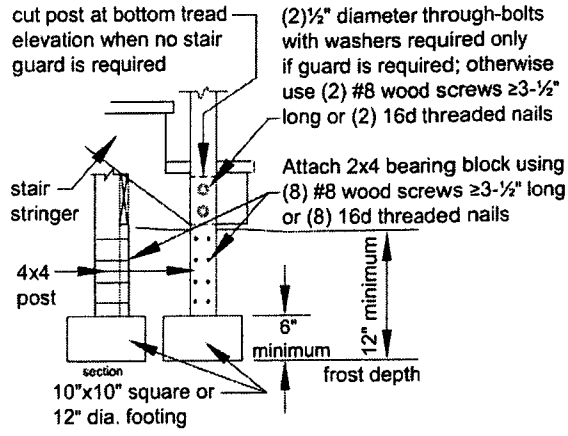

## FRAMING AT CHIMNEY OR BAY WINDOW

All members at a chimney or bay window shall be framed in accordance with Figure 35. Headers may span a maximum of 6'-0". When a chimney or bay window is wider than 6'-0", one or more 6x6 posts may be added to reduce header spans to less than 6'-0". In such cases, the post footing must meet the requirements in the FOOTINGS section. Headers shall be located no more than 3'-0" from the end of the trimmer joist.

Triple trimmer joists are required on each side of the header if joist spacing is 12" or 16" o.c. or if the trimmer joist span exceeds 8'-6"; otherwise, double trimmer joists are permitted. Trimmer joists may bear on the beam and extend past the beam centerline up to the lesser of $L_O$ or L/4 as shown in Figures 1A and 2, or the trimmer joist may attach to the side of the beam with joist hangers as shown in Figure 1B. Joist hangers shall each have a minimum vertical capacity in accordance with Table 7. Bolts, screws, or lag screws used to attach the hanger to the ledger shall fully extend through the ledger into the 2-inch nominal lumber band joist (1-½" actual) or EWP rim joist. Otherwise a non-ledger deck is required.

**Table 7. Trimmer Joist Hanger Vertical Capacity.**

| Joist Size | Minimum Capacity, lbs |
|---|---|
| 2x6 | 870 |
| 2x8 | 1155 |
| 2x10 | 1420 |
| 2x12 | 1575 |

**Figure 35. Detail for Framing Around a Chimney or Bay Window.**

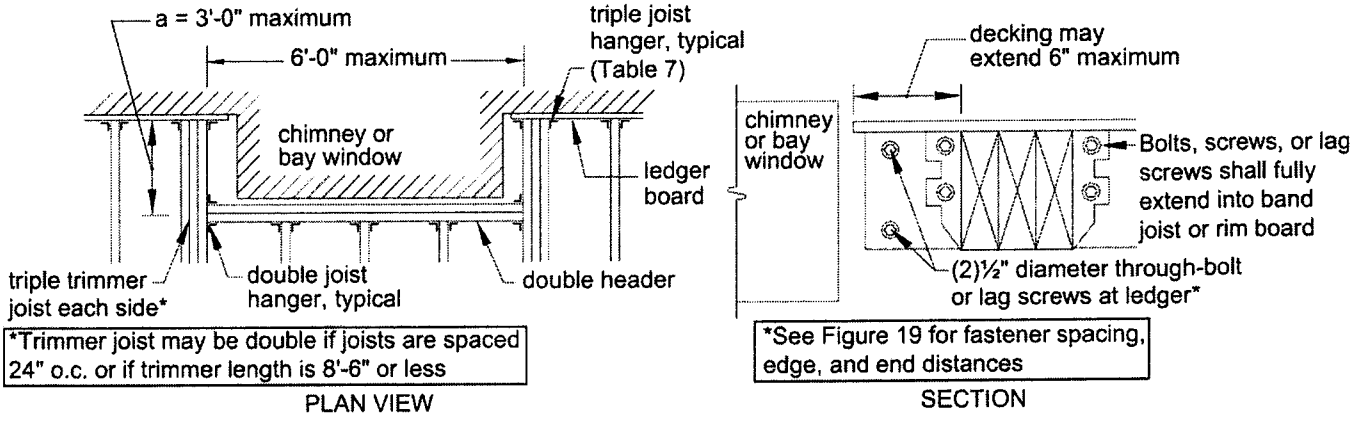

ICC
INTERNATIONAL CODE COUNCIL®

AMERICAN WOOD COUNCIL

COUNTY OF FAIRFAX 1742 VIRGINIA

It is intended that this document be used in conjunction with competent design, accurate fabrication, and adequate supervision of construction. While every effort has been made to insure the accuracy of the information presented, the American Wood Council and its members do not assume responsibility for errors or omissions in the document, nor for designs, plans, or construction prepared from it. Those using this document assume all liability arising from its use.

Copyright © 2007, 2009, 2010, 2014
American Wood Council

05-14